1. *Die Casting:*

Die casting is a permanent-mold casting process in which the molten metal is injected into the mold cavity under high pressure. Used for low melting point (non-ferrous) metals.

Die casting is a manufacturing process that can produce geometrically complex metal parts through the use of reusable molds, called dies, hence the name die casting. *This process is a further development of Permanent – mold casting.*

- **A permanent mold casting process in which molten metal is injected into mold cavity under high pressure, typical pressures are (7 to 350 MPa).**
- **Pressure is maintained during solidification, then mold is opened and part is removed.**
- **Use of high pressure to force metal into die cavity is what distinguishes this from other permanent mold processes.**
- **It differs from sand casting. Sand casting uses a mold made of sand which is a poor conductor of heat, so the cooling process is very slow, molten metal is simply poured into the mold and the mold is expendable. In permanent mold casting, by contrast, the mold is made from steel or other metal which is a good conductor, so the cooling is fast, it can be reused and the molten metal is being injected.**

***Die Casting Machines*:**

Die casting operations are carried out in special die casting machines which is designed to hold and accurately close two mold halves and keep them closed while liquid metal is forced into cavity [figure(8)].

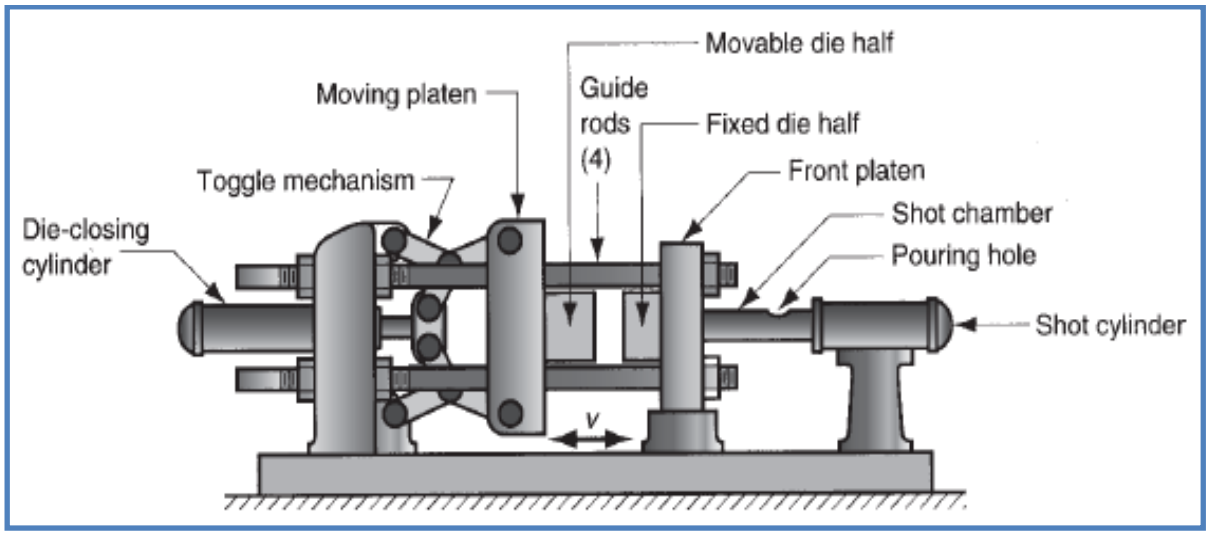

Fig. (8): General configuration of a Die Casting machine.

The Four Steps of Die Casting

There are four key steps in the process of die casting, the die casting machine should be at the required temperature, to ensure the molten metal not to solidify too quickly. According to the size of the casting, heating can take from several hours to several minutes. The four steps are:

1) Spray the mold with lubricant and close it, allowing for an easier removal of the cast object later on.

2) Inject the molten metal into the die. The metal is inserted at an extremely high pressure, which allows the metal to conform to the precise shape of the die. Air escapes into overflow wells, and out vents, and metal fills the molds

3) Cool the mold, and wait for the metal to solidify. In some cases, the mold may be immersed or sprayed with cold water to help the casting become solid faster. A high

pressure is maintained inside the mold, which ensures the metal doesn't change properties while inside the die.

4) Open the two molds halves and remove the solid cast by knockout pins eject the part. The parts are cut off the runners and sprues.

There are two main types of Die – Casting machines:

1. **Hot-chamber machine.**
2. **Cold-chamber machine.**

1) *Hot-Chamber Die Casting:*

Metal is melted in a container, and a piston injects liquid metal under high pressure into the die [see fig. (9) below].

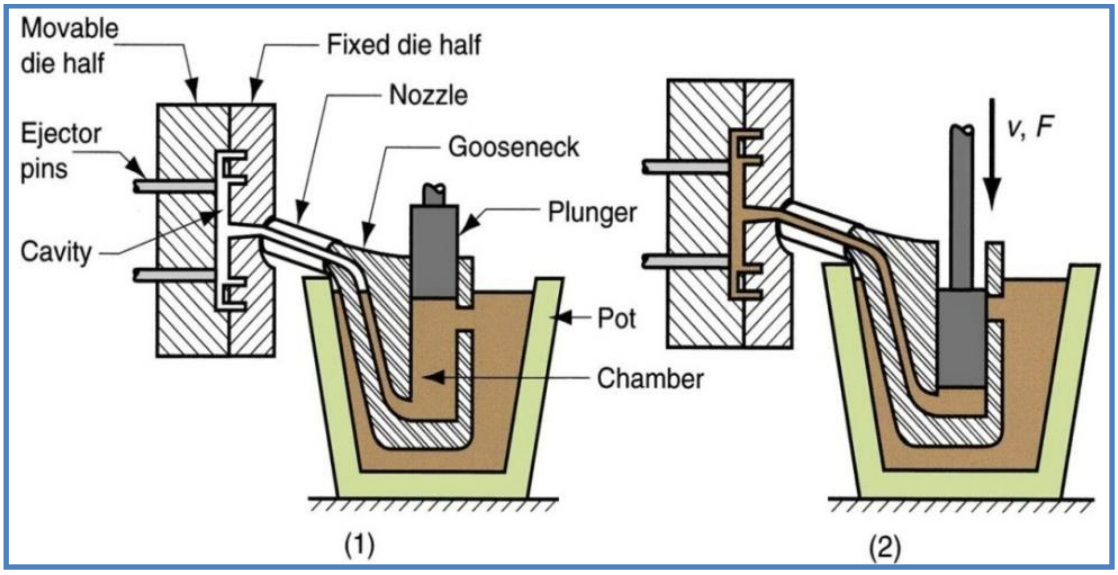

Fig. (8): Cycle in hot - chamber casting.

- **High production rates - 500 parts per hour not uncommon.**
- **Applications limited to low melting-point metals (approximately 400 ^{o}C) that do not chemically attack plunger and other components due to the hot metal that is poured in to them.**
- **Casting metals: zinc, tin, lead, and magnesium.**
- **With die closed and plunger withdrawn, molten metal flows into the chamber.**
- **Plunger forces metal in chamber to flow into die, maintaining pressure during cooling and solidification.**

2) *Cold Chamber Die Casting Machine:*

Molten metal is poured into unheated chamber from external melting container (ladle), and a piston injects metal under high pressure into die cavity *at pressure as much as (10 times) than that in the Hot – Chamber process.* [see fig. (10) below]:

- **High production but not usually as fast as hot-chamber machines because of pouring step**
- **Casting metals: aluminum, brass, and magnesium alloys.**
- **Advantages, its use on low melting-point alloys (zinc, tin, lead) can also be cast on cold-chamber machines, but the advantages of the hot-chamber process usually favor its use on these metals.**

Figure (10) shows the steps of this process:

(1) With die closed and ram withdrawn, molten metal is poured into the chamber.
(2) Ram forces metal to flow into die, maintaining pressure during cooling and solidification.

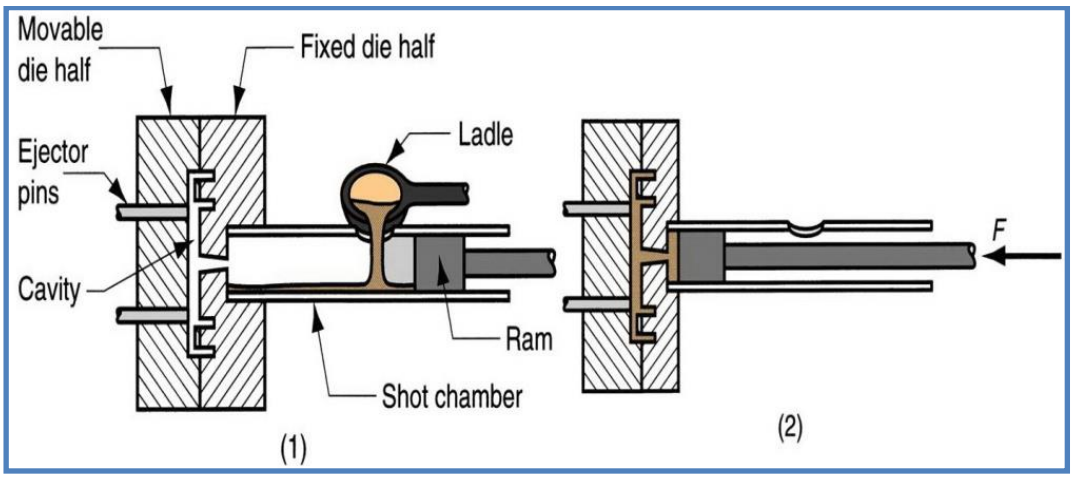

Fig. (10): Cycle in cold-chamber casting.

Molds for Die Casting:

- **Usually made of tool steel, mold steel, or maraging steel (a strong tough low-carbon martensitic steel which contains up to 25 percent nickel and in which hardening precipitates are formed by aging)**
- **Tungsten and molybdenum (good refractory qualities) used to die cast steel and cast iron.**
- **Ejector pins required to remove part from die when it opens.**
- **Lubricants must be sprayed into cavities to prevent sticking.**

Advantages of die casting:

- **Economical for large production quantities.**
- **Good accuracy and surface finish.**
- **Thin sections are possible.**
- **Rapid cooling provides small grain size and good strength to casting.**

Disadvantages:

- **Generally limited to metals with low metal points.**
- **Part geometry must allow removal from die.**
- **Metal dies must withstand high pressures.**
- **Die life is shortened by extreme temperature fluctuations.**

Dies in Die – Casting:

A die is a tool containing a cavity that imparts a shape to a solid, molten, or powder metal or other material, such as wax or plastic [see fig. (11) below].

Die: **consisting of a pair (or a combination of pairs) of mating members for producing certain casting, including all supporting & actuating elements of the tool [fig. (12) below].**

Two dies are used in die casting; one is called the "cover die half" and the other the "ejector die half". Where they meet is called the parting line.
The cover die contains the sprue (for hot-chamber machines) or shot hole (for cold-chamber machines).

- **One of the design considerations in dies for die casting is that a taper on cavity walls must be added so the part can be removed from the die.**
- **A second concern is where to locate the parting line to form the two die halves so the part can be easily removed after forming.**
- **Thermal expansion of the die material must be considered as well as thermal contraction of the part during cooling**
- **The dies must be massive and strong enough to withstand the subjected high load of metal injected inside it.**

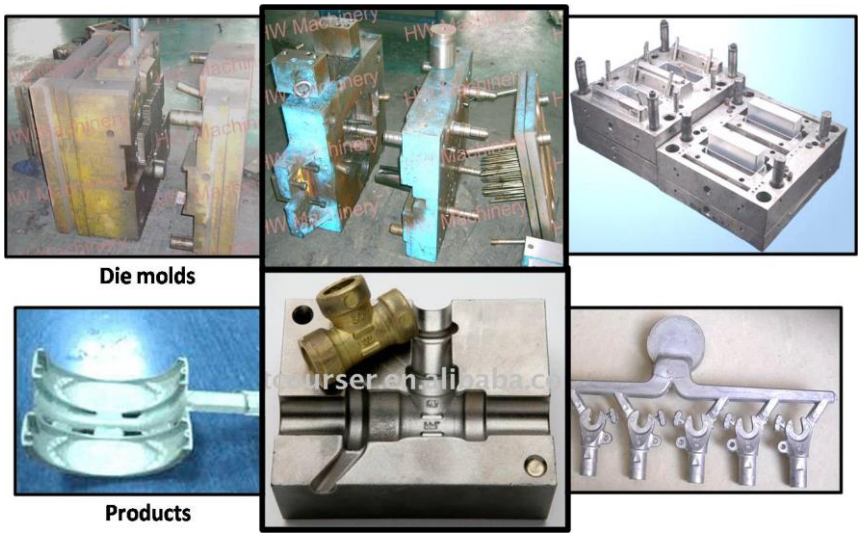

Fig. (11): The Die molds and its products.

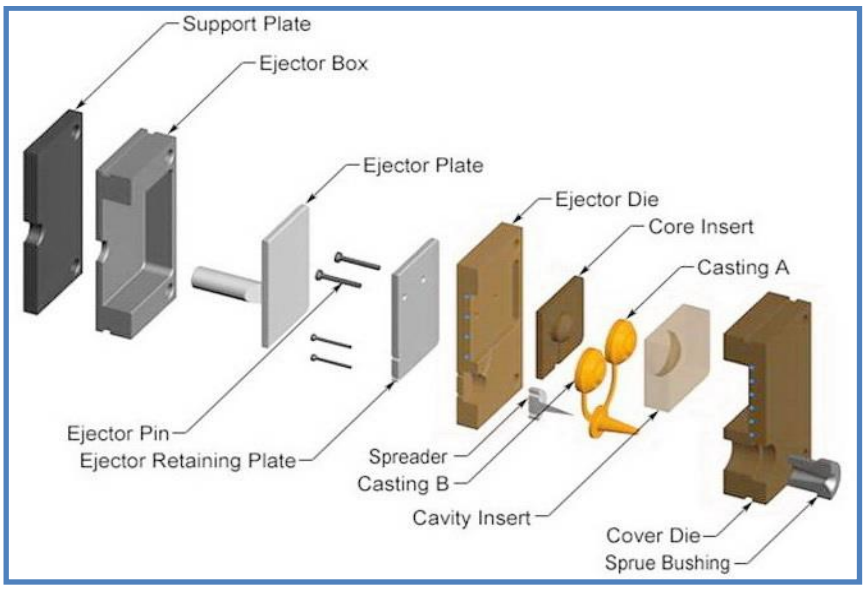

Fig. (12): The main components of Dies in Die casting.

Types of Dies are* [see fig. (13) below]*:

- ***Single Cavity*: (turns out only (1) casting for each cycle of operation.**
- ***Multi Cavity*: large – quantity production of small & moderate size pieces, a number of cavities may be sunk in a single Die & may be gated from common sprue.**

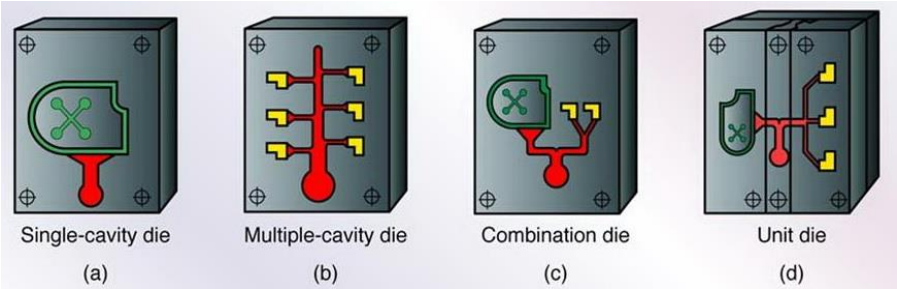

Fig. (13): The types of Dies in Die casting.

- ***Combination*: the cavities are of (2) or more different shapes & produces as many different part at one time.**
- ***Unit*: consist of a die holder in which several die elements may be placed & filled at the same time.**

2. *Centrifugal Casting:*

A family of casting processes in which the molten metal is pouring into mold which is rotated at high speed (200 - 1000 rpm is reasonable), so centrifugal force distributes molten metal to outer regions of the die cavity.

The group includes:

- **True centrifugal casting.**
- **Semi-centrifugal casting.**
- **Centrifuge casting.**

Centrifugal Casting produces:

- ***Good quality.***
- ***Accurate casting.***
- ***Saves material.***
- ***Dense product & have fine grained structure with uniform & high physical properties.***
- ***Less subjected to directional variation than static casting.***