Power Electronics and Special Machines

Lecture 1: Introduction to Power Electronics

Prepared By
Dr. Mustafa Fadel

Lecture 1: Introduction to Power Electronics

Contents:

1. Introduction
2. Power Switching Devices
3. Rectifiers
4. Inverters
5. DC line commutation and choppers
6. Single-phase AC voltage controllers

References:

1. Cyril W. Lander, Power Electronics, Second edition, McGraw-Hill Book Company (UK) Limited, 1987.
2. Muhammad H. Rashid, Power Electronics: Circuits, Devices, and Applications, Second edition, Prentice-Hall of India Private Limited, New Delhi, 1994.
3. B. W. Williams, Power Electronics: Devices, Drivers, and Applications, Printed in Hong Kong, 1987.

1. Introduction

Power electronics combine power, electronics, and control. Control deals with

the steady-state and dynamic characteristics of closed-loop systems. Power deals with the static and rotating equipment for the generation, transmission, and distribution of electric power. Electronics deal with the solid-state devices and circuits for signal processing to meet the desired control objectives.

Power electronics may be defined as “the application of solid-state electronics for the control and conversion of electric power.”

Applications of Power Electronics:

1. Heat control
2. Light control
3. Motor speed control
4. Power supplies
5. Vehicle propulsion systems
6. High-voltage direct-current (HVDC) systems

Types of Power Electronics Circuits

1. Diode rectifiers
2. AC–DC converters (controlled rectifiers)
3. AC–AC converters (AC voltage controllers)
4. DC–DC converters (DC choppers)
5. DC–AC converters (inverters)
6. Static switches

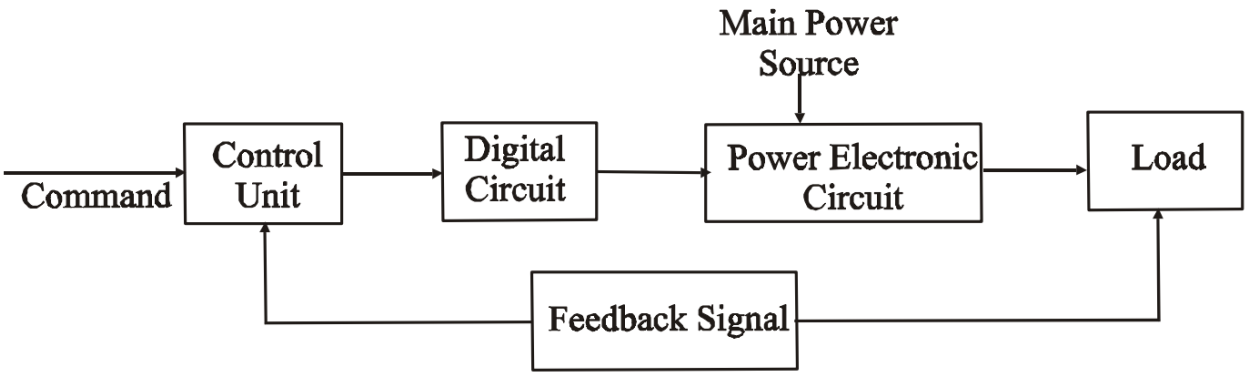

Figure 1: Power electronics system block diagram.

The input to the power processor is from the electric utility source. Depending on the application, the output to the load may have any of the following forms:

1. DC

- Regulated (constant magnitude)
- Adjustable magnitude

2. AC

- Constant frequency and adjustable magnitude
- Adjustable frequency and adjustable magnitude

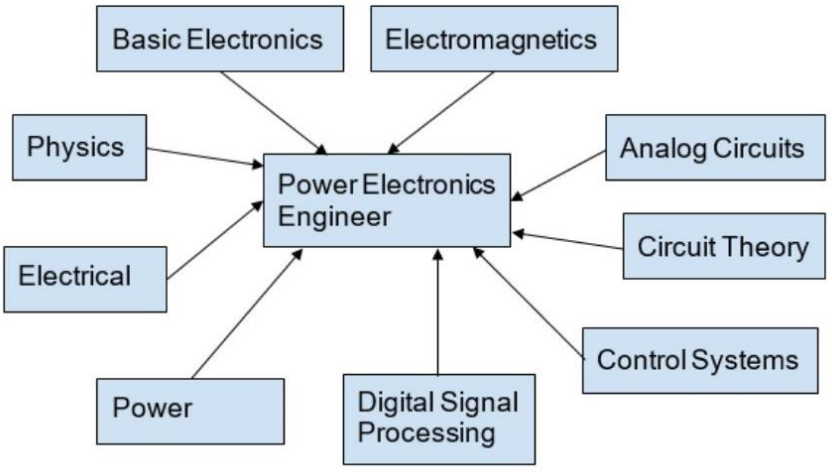

Figure 2: Required Knowledge for Power Electronics Engineer.

History of Power Electronics

- The history of power electronics began with the introduction of the mercury-arc rectifier in 1900.
- Grid-controlled vacuum-tube rectifier was used for power control until the 1950s.
- Invention of the silicon transistor in 1948.
- Invention of PNPN triggering transistor which was defined a thyristor or (SCR).

Bell laboratories by Bardeen, Brattian, and Schckley.

- Development of the PNPN triggering transistor at Bell Laboratories by Bardeen, Brattain, and Shockley, which was defined as a “thyristor” or SCR.
- Development of the commercial thyristor by the General Electric Company in 1958.
- Until 1970, the conventional thyristors had been exclusively used for power electronics.
- Since 1970, various types of power semiconductor devices were developed. These devices include:

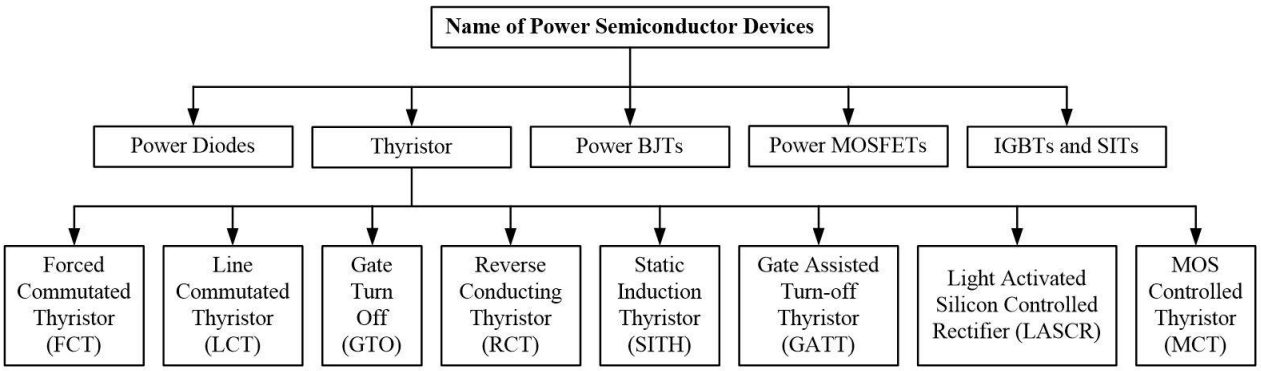

Figure 3: Types of power semiconductors.

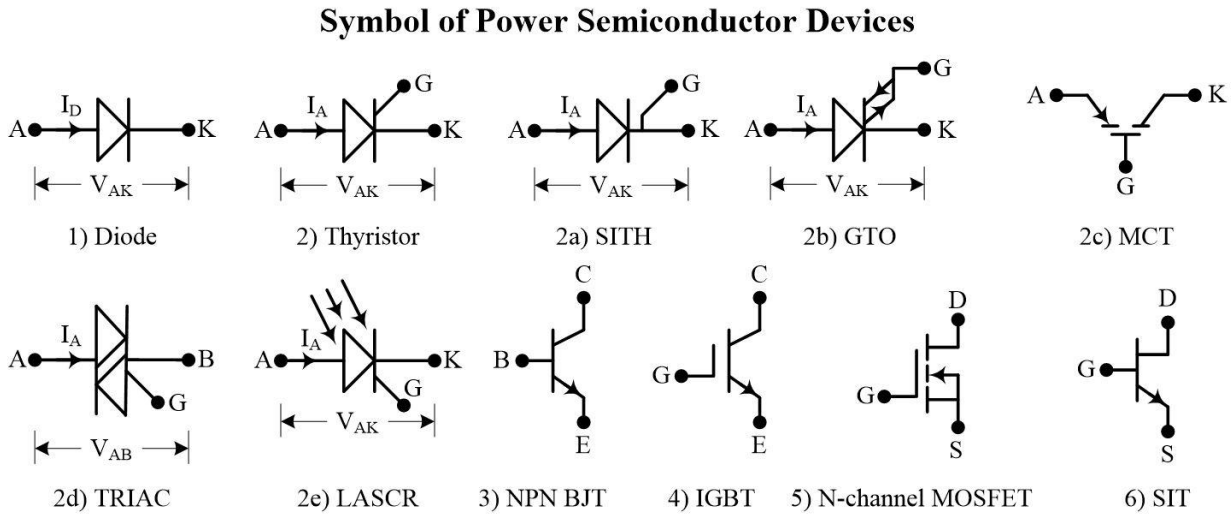

Figure 4: Symbols of power semiconductors.