Power Electronics and Special Machines

Lecture 2: Power Switching Devices (Part 1)

Prepared By
Dr. Mustafa Fadel

Lecture 2: Power Switching Devices (Part 1)

1. Diode

A diode is a fundamental two-terminal semiconductor device that acts as a unidirectional switch, allowing electric current to flow in only one direction. The basic construction and circuit symbol of the diode are shown in Figure 1. Physically, the device consists of a single PN semiconductor junction formed by joining a P-type material and an N-type material (Fig. 1a). The terminal connected to the P-region is designated as the Anode, while the terminal connected to the N-region is designated as the Cathode. In circuit schematics, the diode is represented by the symbol shown in Figure 1b, where the triangular arrowhead points in the direction of allowable forward current flow (from Anode to Cathode) and the vertical bar represents the barrier blocking reverse current.

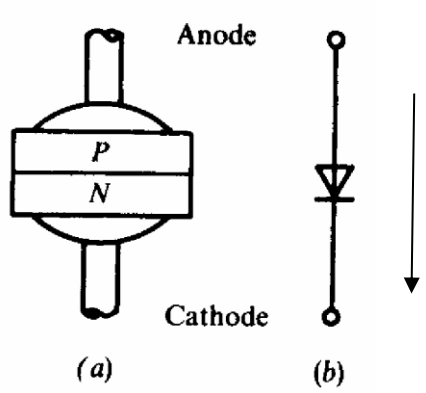

Figure 1: Basic representation of a semiconductor diode: **(a)** PN junction layer structure, **(b)** Standard circuit schematic symbol.

The electrical behavior of the diode is defined by its voltage-current (*V-I*) characteristic, as illustrated in Figure 2. Under practical operating conditions (Fig.

2a), the device exhibits three distinct regions of operation:

- **Forward Conduction:** When a positive forward voltage is applied across the terminals (V > 0), the diode is forward-biased. Significant conduction begins only after overcoming a small threshold voltage drop, typically around 0.7V for silicon devices, beyond which the forward current *I* increases rapidly.
- **Reverse Blocking:** When a negative reverse voltage is applied (V < 0), the diode enters reverse bias and blocks the flow of main current, maintaining only a negligible reverse leakage current.
- **Reverse Breakdown:** If the applied reverse bias exceeds the critical peak inverse voltage rating of the device, avalanche breakdown occurs, causing a sharp, uncontrolled rise in reverse current that can permanently damage the component if not limited externally.

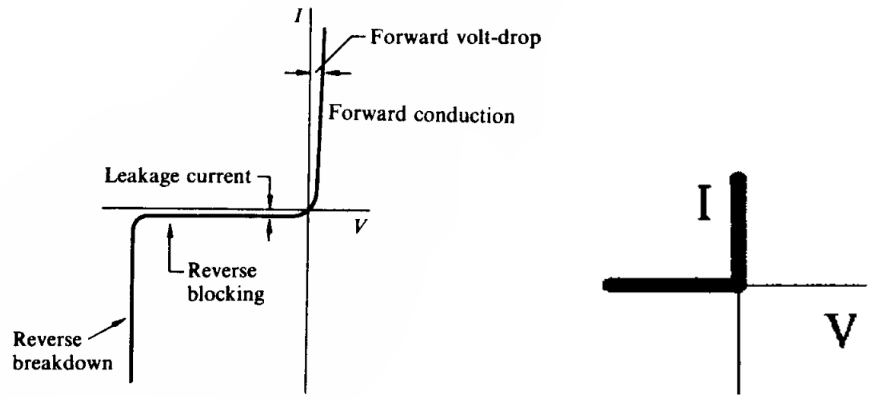

Figure 2: The diode V-I characteristic for: **(a)** practical diode, **(b)** ideal diode.

For simplified power electronic circuit analysis and initial converter design, the diode is often modeled using the ideal characteristic shown in Figure 2b. In this ideal representation, the diode is assumed to act as a perfect, lossless switch: it exhibits zero forward voltage drop (V = 0) with infinite current-carrying capability during forward conduction (ON state), zero leakage current (I = 0) during reverse blocking (OFF state), and instantaneous switching between states.

The forward conduction voltage decreases with increased junction

temperature. Thus, the on-state voltage has a negative temperature coefficient. At low currents the temperature coefficient of the forward voltage is typically about –2 to –2.5 mV/°C, becoming less negative with increased current. At higher currents the coefficient becomes positive because of the reduced carrier mobility at higher temperatures, which causes the mean junction region to increase in resistance. The effect of changing temperature coefficient at higher current are shown in Figure 3.

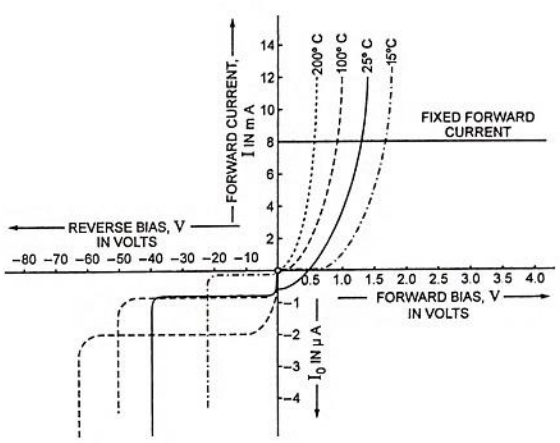

Figure 3: Effect of junction temperature (Tj) on V-I characteristic.

2. Power Transistor (BJT)

The transistor is a three-layer N-P-N or P-N-P devices as shown in Figs. 4 and 5. Within the working range, the collector current I_C is a function of the base current I_B, a change in base current giving a corresponding amplified change in the collector current for a given Collector-emitter voltage V_{CE}. The ratio of these two currents is in the order of 15 to 100. Related to the circuit symbol of Figure 4, the transistor characteristic is shown in Figure 6.

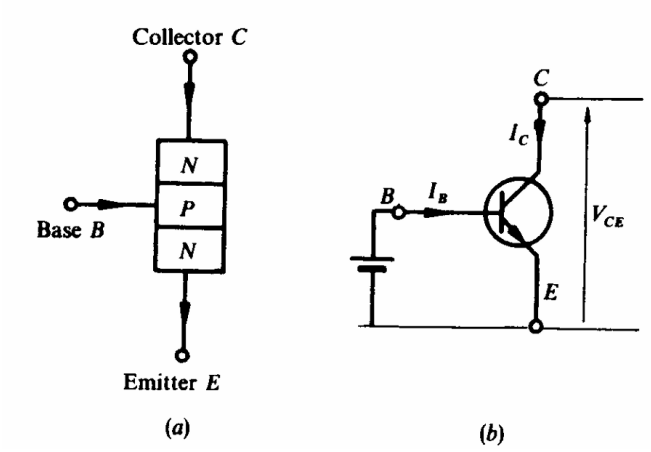

Figure 4: N-P-N transistor: **(a)** structure, **(b)** symbol with current direction.

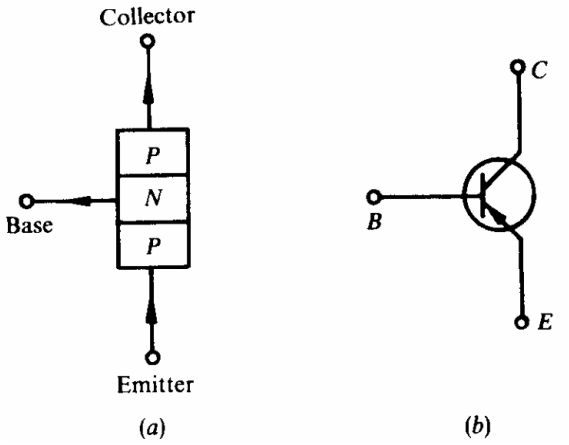

Figure 5: P-N-P transistor: **(a)** structure, **(b)** symbol.

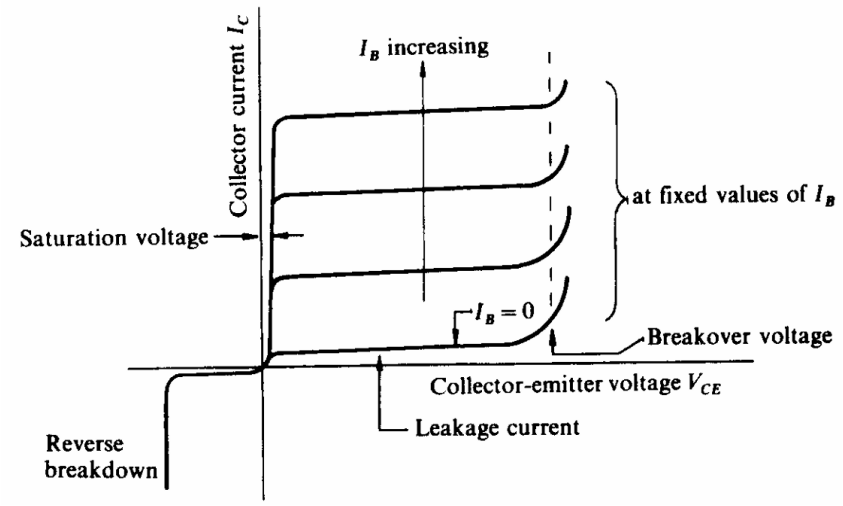

Figure 6: Common emitter characteristic for N-P-N transistor.

For power applications, the transistor is operated as a switch. With zero base current, it is effectively an open-circuit condition as shown in Fig. 7.a. With a base current which takes the device into saturation, it is effectively a closed switch. The transistor is a controlled device. In order to retain control when in the saturated state and so avoid excessive base charge, the base current should be just sufficient to maintain saturation. Any change in the collector current must be matched by change in base current, therefore at turn-off, the base current should be reduced at a rate which the collector can follow, so as to avoid secondary breakdown. As a switch, the transistor power losses are small, being due to the small leakage current in the open position and the saturation voltage with the collector current when in the closed position.

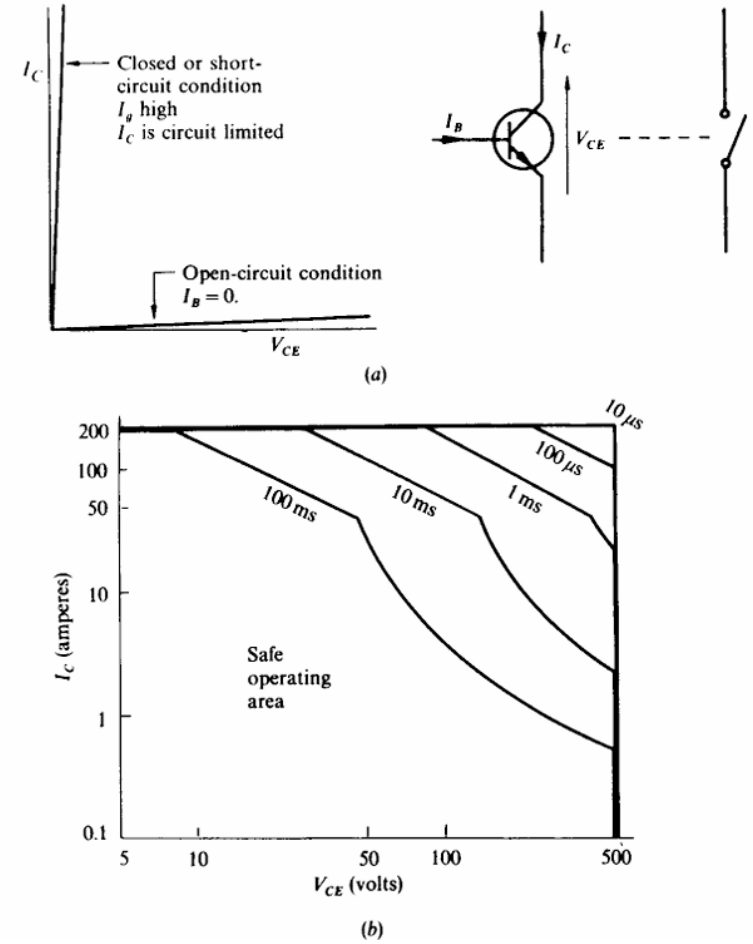

Figure 7: Transistor as switch. **(a)** On or Off-state, **(b)** Typical safe operating area.

- The safe operating area characteristic shown in Fig. 7-b is used to operate the transistor without overheating during switching, it is essential that the instantaneous voltage and current values must at all times during the switching period be within the rectangular area. Note that the scales of safe operating area are logarithmic.
- The product of voltage and current with the switching time giving the energy loss for one switching operation. The switching losses is high since both the voltage across and the current through can be high during switching.
- The current gain of the power transistor is low and can be improved if the base drive current is obtained from another transistor in what is known as a "Darlington arrangement" as shown in Fig. 8.

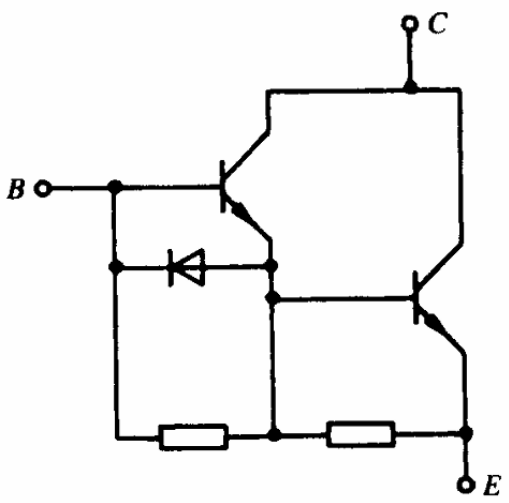

Figure 8: Darlington arrangement of power transistor.

Secondary breakdown: The secondary breakdown (SB), which is a destructive phenomenon, results from the current flow to a small portion of the base, producing localized hot spots. Thus, secondary breakdown is caused by a localized thermal runaway, resulting from high current concentrations. The SB occurs at certain combinations of voltage, current, and time. Since the time is involved, the secondary breakdown is basically an energy dependent

phenomenon.

Thermal runaway: collector current causes an increase in temperature which increases the conductivity of the bipolar transistor. More current then flows, further increasing the device temperature. This endless increasing of temperature results in thermal runaway and eventual device destruction.

3. Power MOSFET

A power MOSFET (Metal Oxide Semiconductor Field Effect Transistor) is a voltage-controlled device and requires only a small input current. The switching speed is very high and the switching times are of the order of nanoseconds. Power MOSFETs are finding increasing applications in low-power high-frequency converters. MOSFETs do not have the problems of second breakdown phenomena as do BJTs. However, MOSFETs have the problems of electrostatic discharge and require special care in handling.

The characteristic of the MOSFET is shown in Fig. 9-b to the circuit reference of Fig. 9-a. At very low values of drain-source voltage the device has a constant resistance characteristic, but at higher values of drain-source voltage the current is determined by the gate voltage. However, in power applications the drain-source voltage must be small in order to minimize the on-state conducting losses. The gate voltage is thus set at a high enough level to ensure that the drain current limit is above the load current value, that is, the device is operating in the constant resistance condition. The gate voltage must be limited to a maximum value of approximately 20V.

Reference to Fig. 9-a shows that in the opposite direction, that is, from the source to drain, there is a diode. The reverse connected diode is essential in the inverter circuits. The on-resistance of the MOSFET is a function of the voltage breakdown rating, with typical values being 0.1 Ω for a 100 V device and 0.5 Ω for a 500 V device. The resistance is always higher for the higher-

rated voltages. The conduction losses for MOSFETs are higher than the bipolar transistor (the on-state voltage drop is high), but the switching loss is much less. The MOSFETs have a positive temperature coefficient for resistance; hence paralleling of devices is relatively simple.

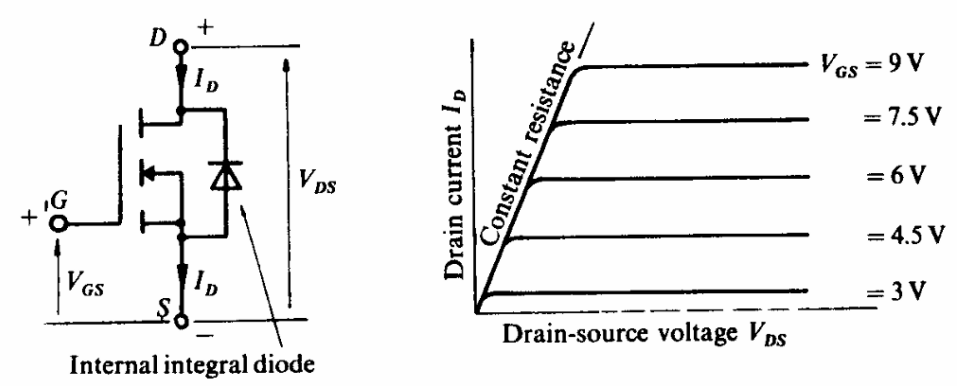

(a) **(b)**

Figure 9: Power MOSFET. (a) Electric circuit. (b) Output characteristic.

4. Insulated Gate Bipolar Transistor (IGBT):

An IGBT combines the advantages of BJT and MOSFET. An IGBT has high input impedance, like MOSFET, and low on-state conduction losses, like BJT. But there is no second breakdown problem, like BJT MOSFET. An IGBT is a voltage-controlled device similar to a power MOSFET. It has lower switching and conduction losses while sharing many of the appealing features of power MOSFET, such as ease of gate drive, and ruggedness. An IGBT is inherently faster than a BJT. However, the switching speed of an IGBT is inferior to that of MOSFET.

The symbol of an IGBT is shown in Fig. 10. The three terminals are gate, collector, and emitter instead of gate, drain, and source for a MOSFET. The current rating of a single IGBT can be up to 400 A, 1200 V, and the switching frequency can be up to 20 kHz. IGBT is finding increasing applications in medium-power applications such as dc and ac motor drives, power supplies, and solid-state relays.

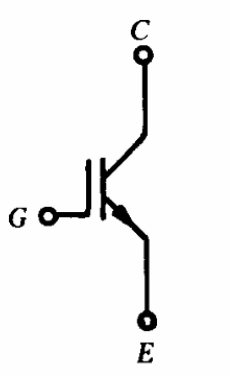

Figure 10: IGBT Symbol.