



Power Electronics and Special Machines

Lecture 3: Power Switching Devices (Part 2)

Prepared By
Dr. Mustafa Fadel

Lecture 3: Power Switching Devices (Part 2)

1. Thyristor (SCR)

A thyristor is a four-layer semiconductor device of P-N-P-N structure with a third terminal, the gate as shown in Figure 1.

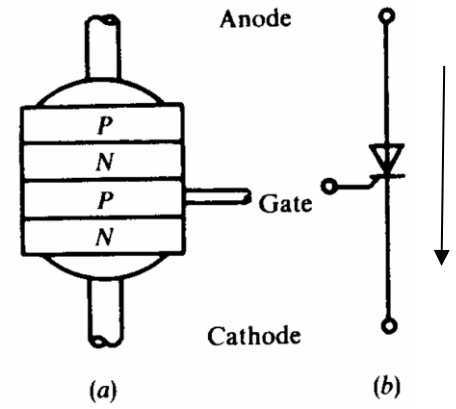

Figure 1: The thyristor: **(a)** Structure, **(b)** Symbol.

Figure 2 illustrate the typical V-I characteristics.

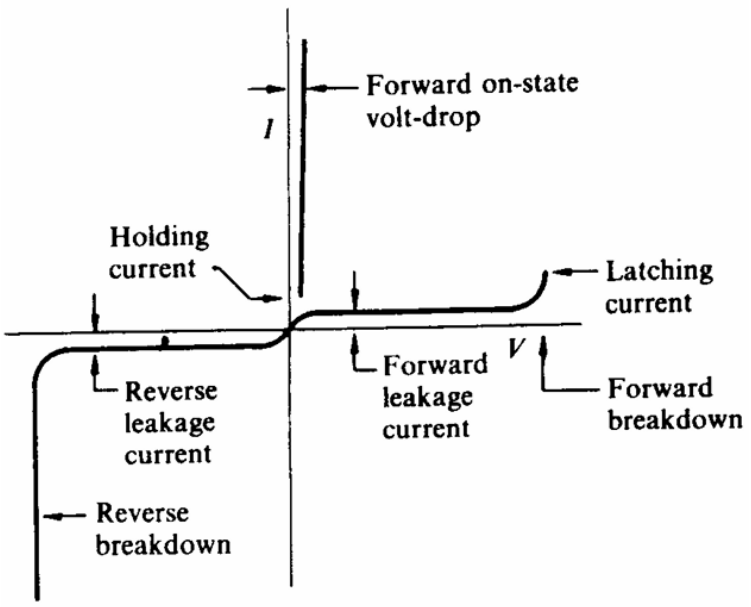

Figure 2: Thyristor characteristics.

When the anode voltage is made positive with respect to the cathode, junctions J_1 and J_3 are forward biased and the middle junction J_2 is reverse biased. Under this condition only a small leakage current flow from anode to cathode. If the anode–cathode voltage V_{AK} is increased to a sufficiently large value, known as the forward breakover voltage V_{BO}, the reverse-biased junction J_2 will break (in the absence of gate current $I_g = 0$). The forward and reverse breakover voltages are similar in magnitude, due to, in the reverse blocking state, almost all the voltage appearing at the anode P-N junction. Once breakover in the forward direction occurs, the device acts as a conducting diode having two junctions giving a forward volt-drop approximately double that of the diode. This mode of turn-on may be destructive and should be avoided.

The thyristor, when forward-biased (anode positive), can be switched into the on-state by injecting current into gate terminal relative to the negative cathode. The action of the gate current is to inject holes into the inner P slice, which, together with the electrons from the cathode N layer, breakover the centre control junction (J_2), switching the thyristor into the on-state. Once the anode current has exceeded the latching level (I_L), the gate current can cease, the thyristor remaining in the on-state, irrespective of conditions in the gate circuit. The anode current must not fall below its holding level (I_h) in order to prevent the non latching on-state. The latching current is typically double the holding current, but both are low, being much less that 1% of the full-load rated value (decreased (Figure 3)).

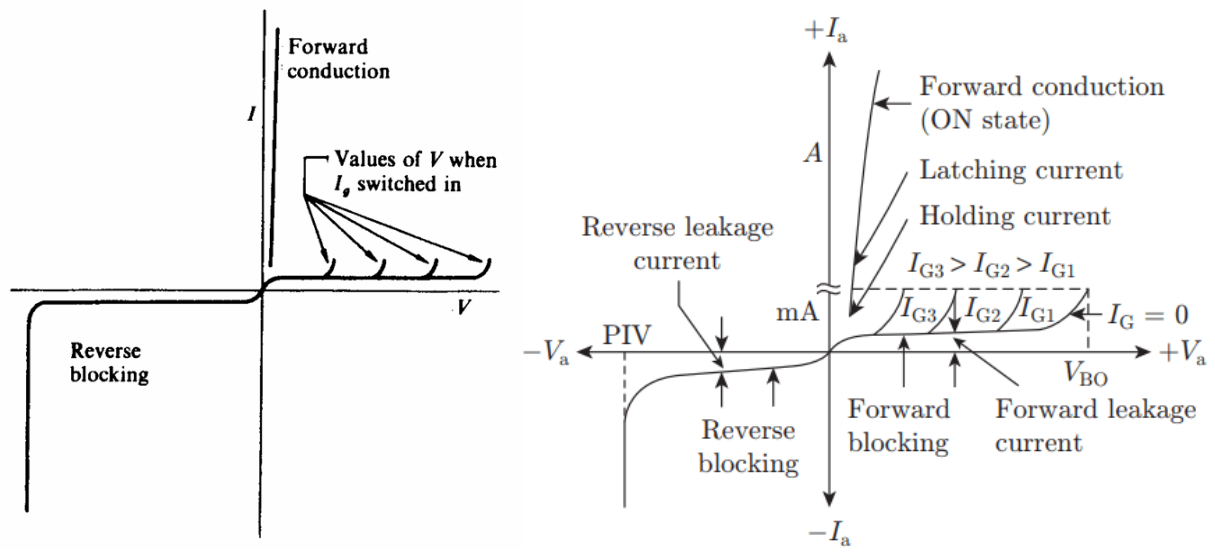

Figure 3: Thyristor characteristics with different gate values.

- When the gate current is increased, the forward blocking voltage is decreased.
- Latching current: The minimum forward current to maintain conduction in a thyristor after the removal of gate current.
- Holding current: The value below which thyristor will cease when the reduction rate is slow.

SCR dynamic properties at switching on

If a thyristor is forward biased, the injection of gate current by applying positive gate voltage between the gate and cathode terminals would turn on the thyristor as shown in Figure 4.

- Turn-on time is a time delay between the application of gate signal and the conduction of a thyristor, and it is defined as the time interval between 10% of steady-state gate current IG and 90% of the steady state thyristor on-state current I_T.
- Delay time (T_d) is defined as the time period between 10% of gate current and 10% of thyristor current I_T.
- Rising time (T_r) is the required time for the thyristor anode current I_T to rise from 10% to 90%.

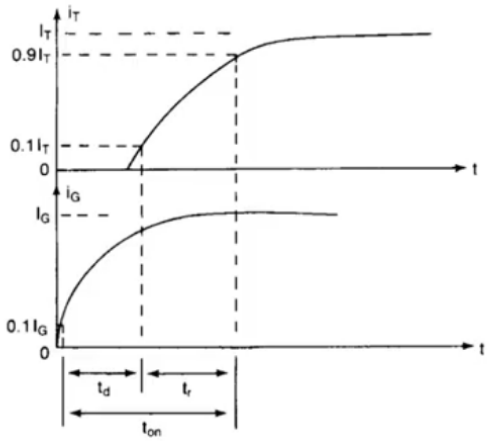

Figure 4: Thyristor turn-on characteristics.

Methods of SCR turning on

A thyristor is turned on by the following methods:

1. Thermals: If the temperature of a thyristor is high, there will be an increase in the number of electron-hole pairs, which would increase the leakage currents and this cause increase in the temperature. Due to this regenerative action, the thyristor may be turned on. This type of turn-on may cause thermal runaway and is normally avoided.

2. Light: If light is allowed to strike the junctions of a thyristor, the electron-hole pairs will increase; and the thyristor may be turned on. The light-activated thyristors are turned on by allowing light to strike the silicon wafer.

3. High voltage: If the forward anode-to-cathode is greater than the forward breakdown voltage VBO, sufficient leakage current will flow to initiate regenerative turn-on. This type of turn-on may be destructive and should be avoided.

4. dv/dt: If the rate of rise of the anode-cathode voltage is high, the charging current of the capacitive junction may be sufficient enough to turn on the thyristor. A high value of charging current may damage the thyristor; and the device must be protected against high dv/dt. The manufacturers specify the

maximum allowable dv/dt of thyristors.

5. Gate current: This way was demonstrated in the dynamic characteristics at switching on.

Methods of SCR turning-off

1- Natural commutation: If the source (or input) voltage is AC, the thyristor current goes to zero when a reverse voltage appears across the thyristor. The device is then automatically turned off due to the natural behavior of the source voltage. This is known as natural commutation or line commutation. In practice, the thyristor is triggered synchronously with the zero crossing of the positive input voltage in every cycle. This type of commutation is applied in ac voltage controllers, phase-controlled rectifiers, and cycloconverters.

2. Forced Commutation: In some thyristor circuits, the input voltage is dc and the forward current of the thyristor is forced to zero by an additional circuitry called commutation circuit to turn off the thyristor. This technique is called forced commutation and normally applied in dc-dc converters (choppers) and dc-ac converters (inverters).

SCR dynamic properties at turning-off

To turn-off the thyristor, the following conditions are required

1. The anode current must be reduced below the holding value; the reduction rate is $-\frac{di}{dt}$ (this rate depends on the load and external circuit).

2. The anode current is driven into reverse by the external circuitry, when for a very short period a reverse current flow as shown in Figure 5. This short period is called reverse recovery time t_{rr}. The flow of reverse current permits charge movement within PN layers, allowing the two outer junctions to block any further reverse current after the storage charge Q_{rr} has been recovered. The stored

charge is due to the presence of the current carriers in the junction region.

3. The central control junction will, however, not block the re-application of a forward voltage until a further time has elapsed, sufficient to allow recombination of the carriers at this junction. Typically, 10 to 100 µs must be elapsed before the forward voltage can again applied without breakdown.

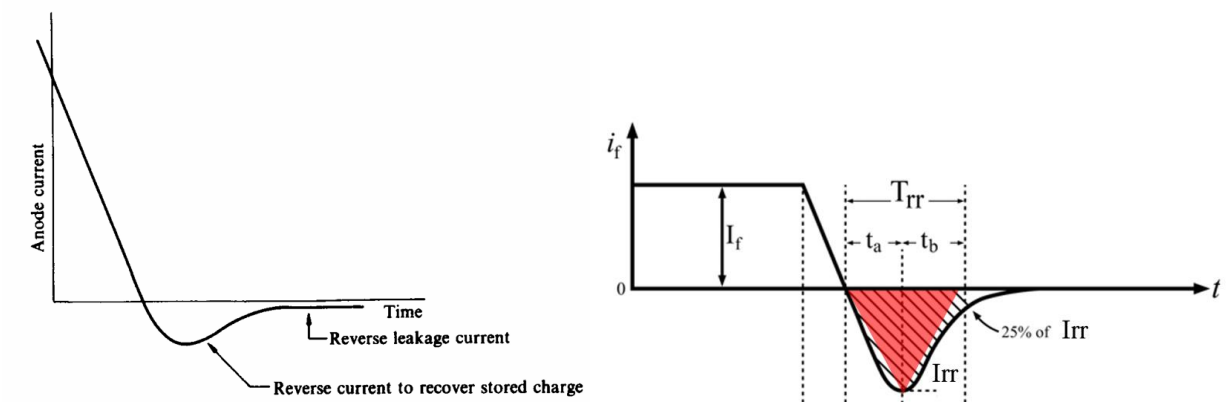

Figure 5: Typical current waveform during turn-off.

* The turn-off time (t_q) is the sum of the reverse recovery time (t_{rr}) and recombination time (t_{rc}). At the end of turn-off, a depletion layer develops across the control junction (J_2) and the thyristor recovers its ability to withstand forward voltage.

* The turn-off time can be defined as the minimum value of time interval between the instant when the on-state current has decreased to zero and the instant when the thyristor is capable of withstanding forward voltage without turning on.

* The turn-off time t_q will increase with increased:

1. junction temperature.
2. Forward current magnitude.
3. Rate of decay of forward current.
4. External gate impedance.

and decreased with:

1. Peak reverse current (I_{rr}).

2. Reverse voltage.

Thyristor Gating Requirements:

* All thyristors can be assumed to have a gate-cathode characteristic lying somewhere between low and high resistance limit as shown in Fig. 15-a.

* The minimum level of current and voltage required to turn on the thyristor is a function of the junction temperature; an indication of these limits is shown in Fig.6a.

* There is a maximum limit for gate voltage VG and gate current IG, also the power (VG·IG) is to set to maximum as shown in Fig.6b.

* The shaded area that is shown in Fig.6c represents the area of certain firing.

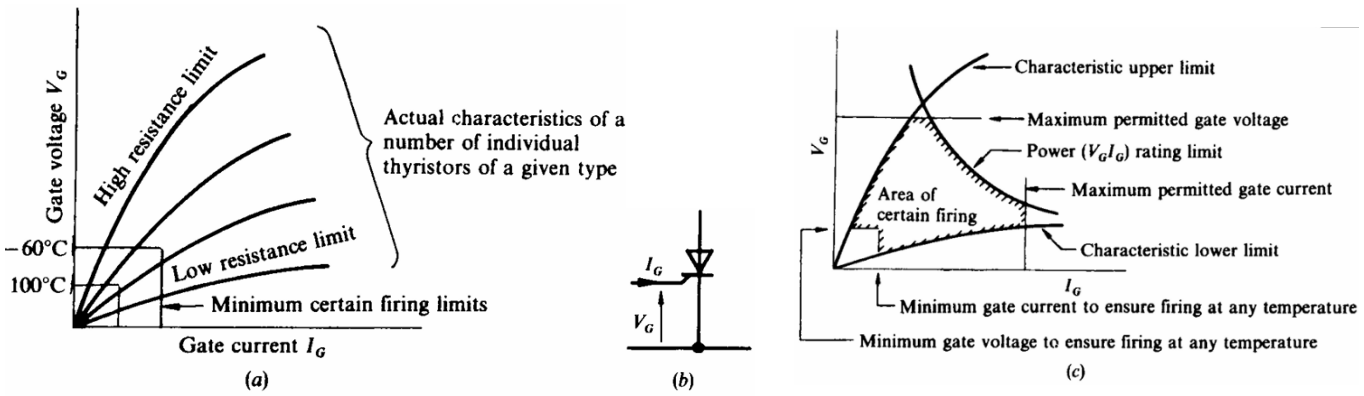

Figure 6: Gate characteristic of the thyristor. (a) Range of characteristic. (b) Circuit reference. (c) Limits.

* The final stage of gate firing (triggering) is shown in Fig. 7a will consist of a pulse transformer for isolation, a resistance R_1 to limit the gate current, and a resistance of $R_2$to limit the gate voltage when the thyristor in the off-state.

* The Thevenin equivalent circuit of firing network shown in Fig. 7b is taken as a voltage E in series with a resistance R_G.

* The relationship in the steady state between the gate voltage V_G and the gate current I_G is defined by the value of E and R_G along the load line shown in Fig. 7c. When the firing signal is initiated, the gate current will grow along the line of the characteristic for that thyristor until in steady state the load line at point p is reached. The parameters of the firing network must be chosen that the load line is above A but within the maximum power limit.

* The firing circuit must generate a fast rise time pulse of sufficient length to allow the anode current enough time to reach its latching value. The advantage of the pulse is that much less power is dissipated in the gate compared to a continuous current, and the instant of firing can be accurately timed.

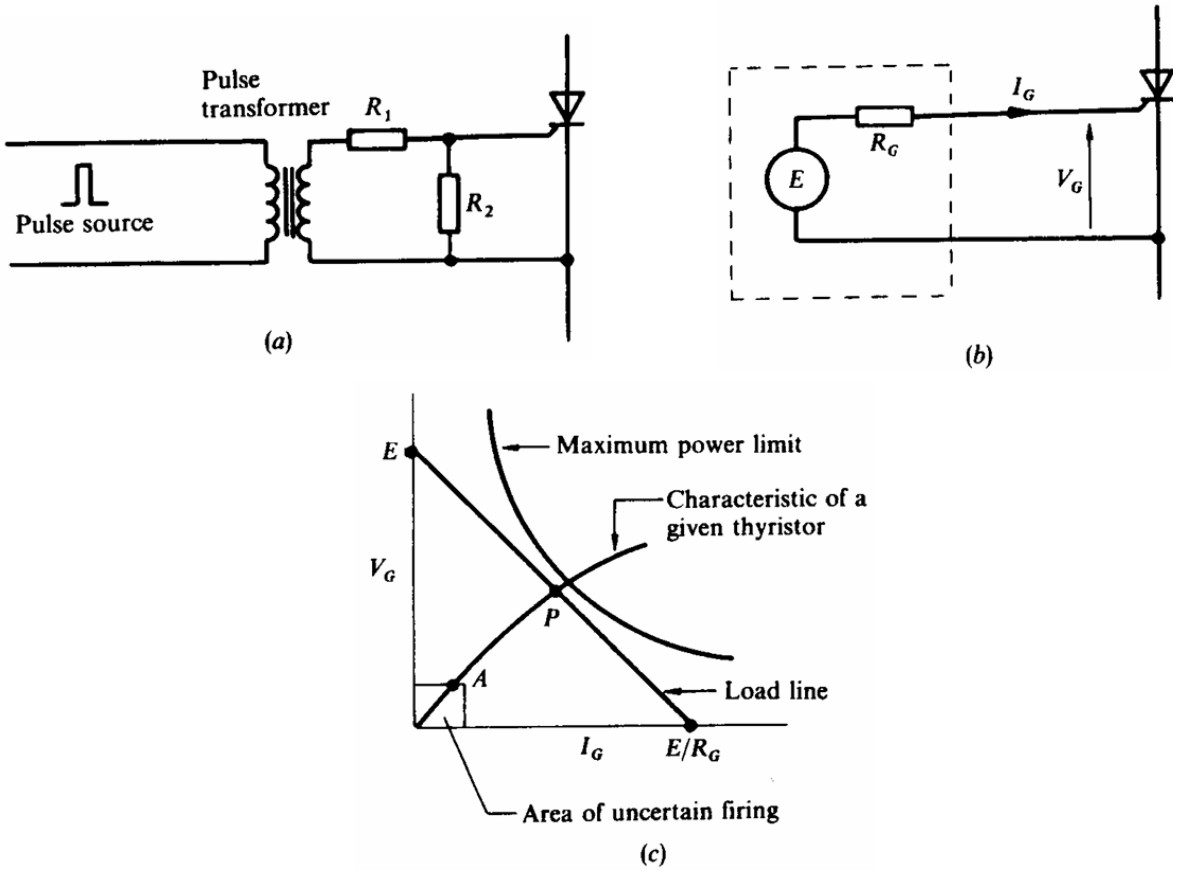

Figure 7: Firing (trigger) network. (a) Desirable network connection. (b) Thevenin's equivalent circuit for firing network. (c) Firing network load line.

* For rectifying circuit, the thyristor shall be turned on at a time related to the ac supply voltage phase. Also, the phase of the firing pulse in relation to the ac supply voltage zero must capable of variation.

* A practical commercial firing circuit will typically have a characteristic pulse such as in Fig. 8a. The firing circuit will normally reset itself after the first pulse to give a succession of pulses spaced (say) 400 µs up to end of half cycle as shown in Fig.8b.

* In the rectifier circuit, condition may not be right for conduction to take place at the first pulse, the second and successive pulses being available to turn on the thyristor.

* Reverse gate current must be prevented to avoid excessive gate power dissipation. Also, injection of gate current when the thyristor is reverse-biased increase the leakage current, and is best avoided.

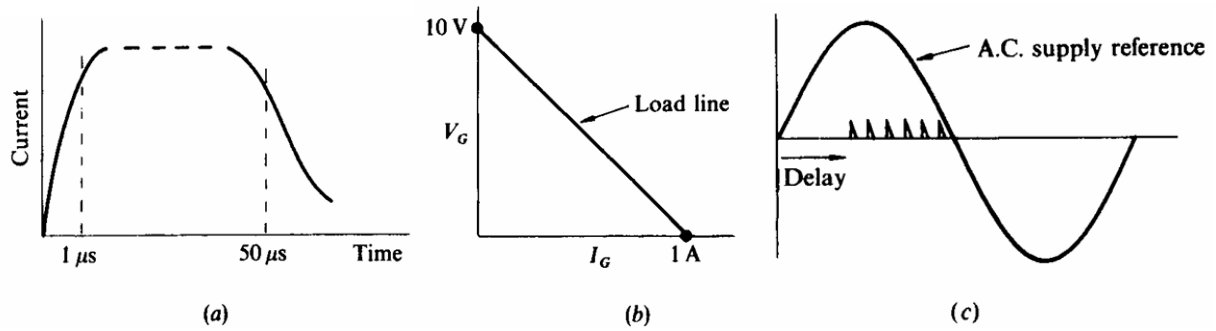

Figure 8: Typical firing circuit output pulse characteristic. (a) Pulse shape. (b) Load line. (c) Firing pulse reference to AC supply.

Typical firing circuits:

Figure 9, shows the simplest firing circuit. While, Figure 10 shows another firing circuit using transistor. A more complex AC converter system is shown in Figure 11.

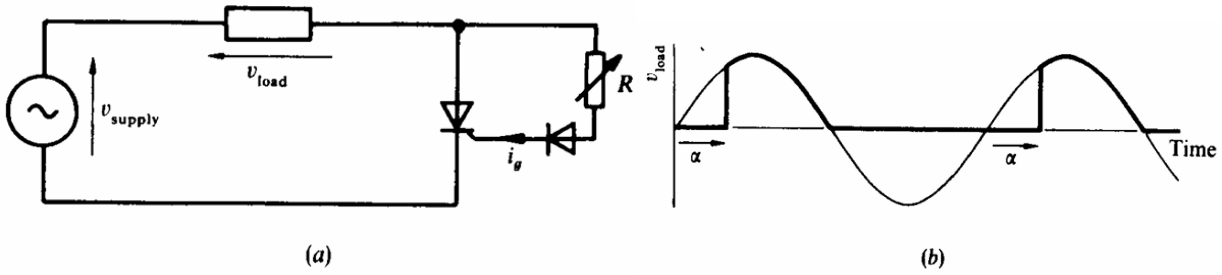

Figure 9: Simple rectifier circuit. (a) A crude firing arrangement. (b) Single-phase control using one thyristor.

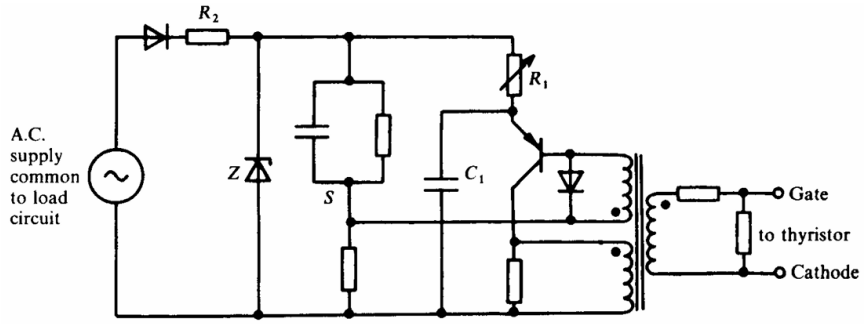

Figure 10: Simple firing circuit using transistor.

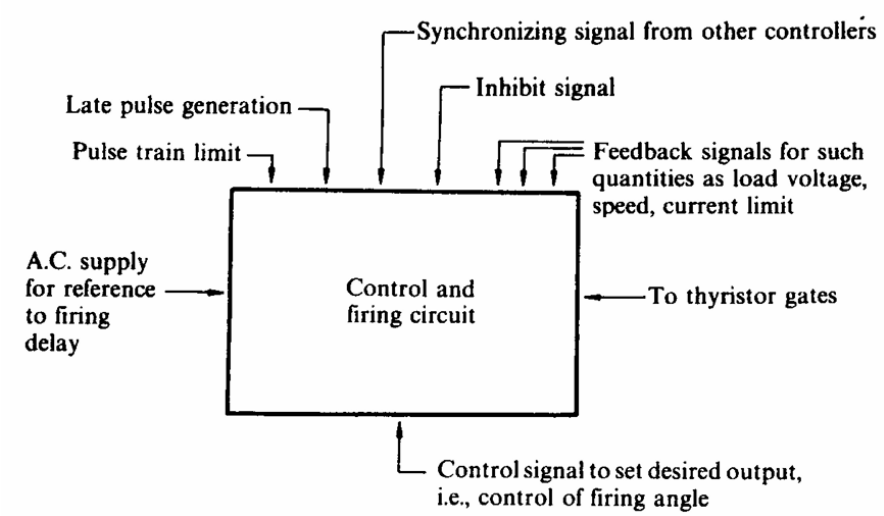

Figure 11: Typical features required in a more complex AC converter system.