

Single-phase Half-wave Rectifiers

Lecture 5

Electrical Engineering Department

Power Electronics and Special Machine

By

Dr. Mustafa Fadel

Important Notice

Note to Students:

These lecture materials are provided as supplementary support to help clarify and reinforce the concepts discussed in the main course lectures. They are not a substitute for the official course materials or the primary references assigned. Students are encouraged to refer to the original sources and attend the main lectures to ensure full understanding of the subject.

Uncontrolled Rectifier with R-L Load and Freewheeling Diode (Commutating diode)

For the uncontrolled rectifier circuit (without freewheeling diode), the stored energy in inductor would cause:

- Large reverse voltage across the load and rectifier diode.
- High ripple and distortion in the output current waveform.
- Discontinuous load current.

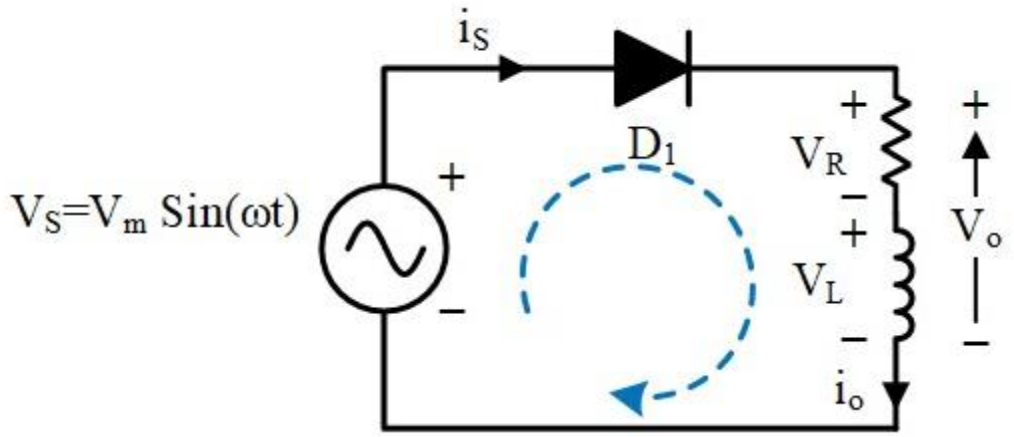

Uncontrolled Rectifier with R-L Load and Freewheeling Diode (Commutating diode)

To prevent this, a freewheeling diode is connected across the load (in parallel with the R–L branch, but with opposite polarity to the supply diodes).

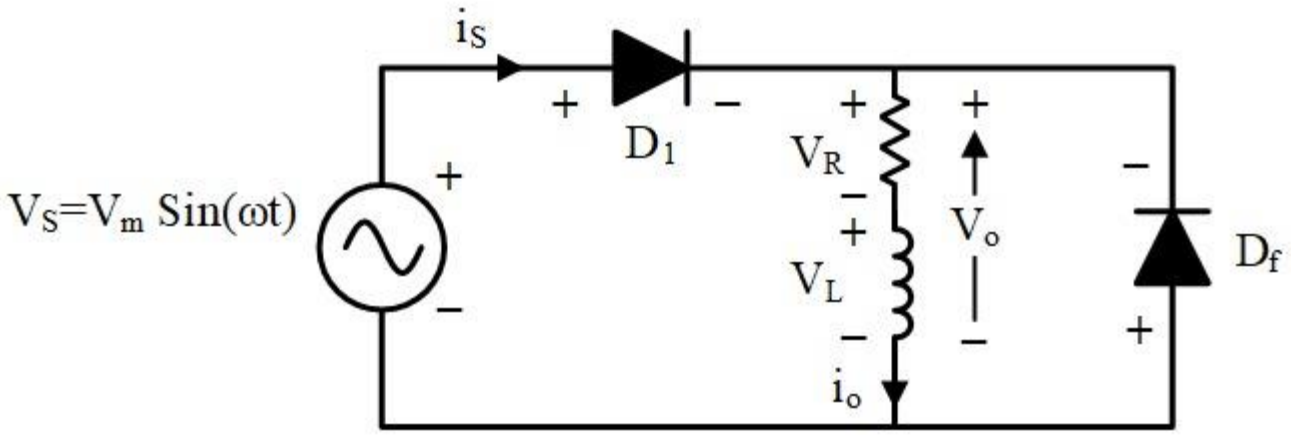

Uncontrolled Rectifier with R-L Load and Freewheeling Diode (Commutating diode)

Circuit Operation:

- **Positive half-cycle:**
  Supply diodes conduct, delivering current to the load and storing energy in the inductor.

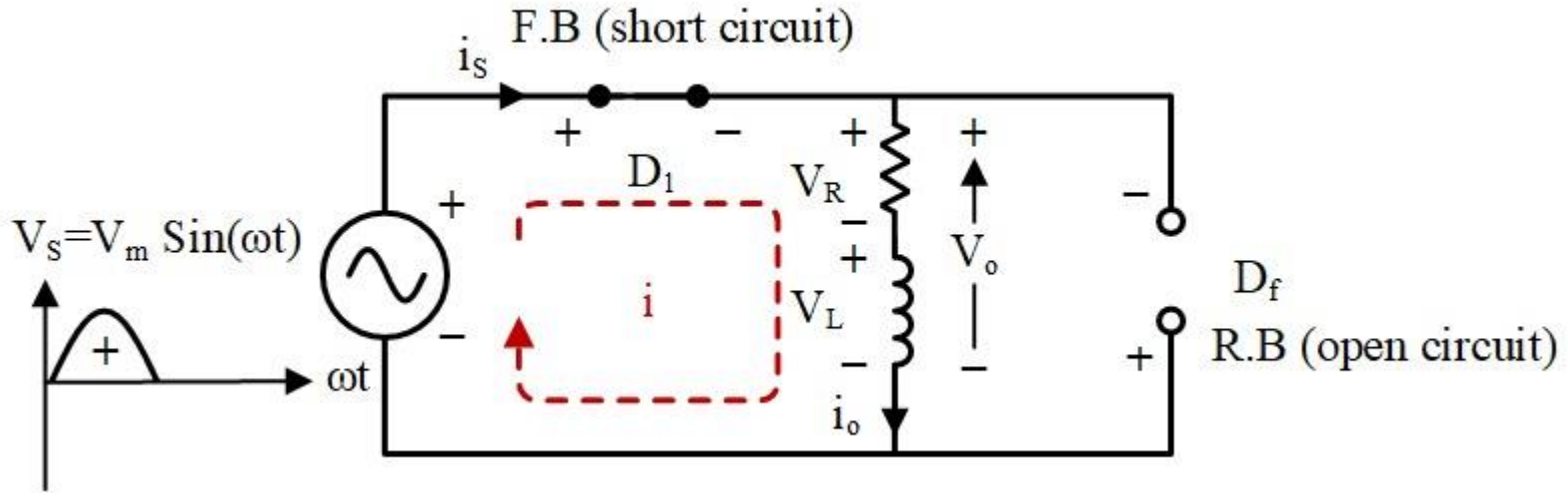

Uncontrolled Rectifier with R-L Load and Freewheeling Diode (Commutating diode)

Circuit Operation:

- **Negative half-cycle:**
  Supply diodes are reverse-biased, and the freewheeling diode conducts. The inductor releases its stored energy through the load and the freewheeling path.

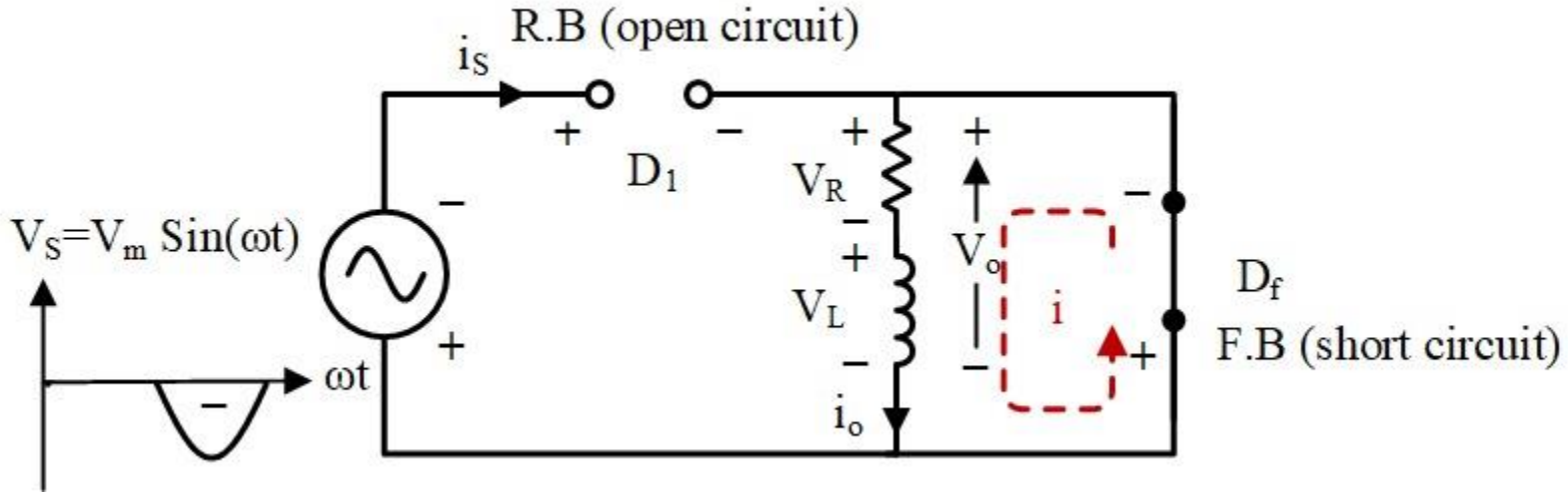

Uncontrolled Rectifier with R-L Load and Freewheeling Diode (Commutating diode)

$$V_{mean} = \frac{V_m}{\pi} \tag{1}$$

$$V_{rms} = \frac{V_m}{2} \tag{2}$$

The ripple voltage given as:

$$V_R = \sqrt{V_{rms}^2 - V_{mean}^2} = 0.3855 \times V_m \tag{3}$$

The ripple factor is defined as:

$$K_v = \frac{V_R}{V_{mean}} = 1.2 \tag{4}$$

Uncontrolled Rectifier with R-L Load and Freewheeling Diode (Commutating diode)

The steady-state load current conditions given as follows:

$$I_{o2\pi} = \frac{V_m}{Z} \sin\theta \frac{\left[1 + e^{(-\pi/\tan\theta)}\right]}{e^{(\pi/\tan\theta)} - e^{(-\pi/\tan\theta)}} \quad (5)$$

Where $Z = \sqrt{R^2 + (\omega L)^2}$ and $\tan\theta = \frac{\omega L}{R}$

$$I_{o1\pi} = I_{o2\pi} \times e^{(\pi/\tan\theta)} \quad (5)$$

Uncontrolled Rectifier with R-L Load and Freewheeling Diode (Commutating diode)

Example: In the given circuit, the source voltage is $240\sqrt{2}\sin(2\pi 50t)V$, $R = 10\Omega$, and L=50 mH. Calculate

(a) The mean value of the load current (I_{mean}).

(b) The current boundary conditions, namely $I_{o2\pi}$ and $I_{o1\pi}$

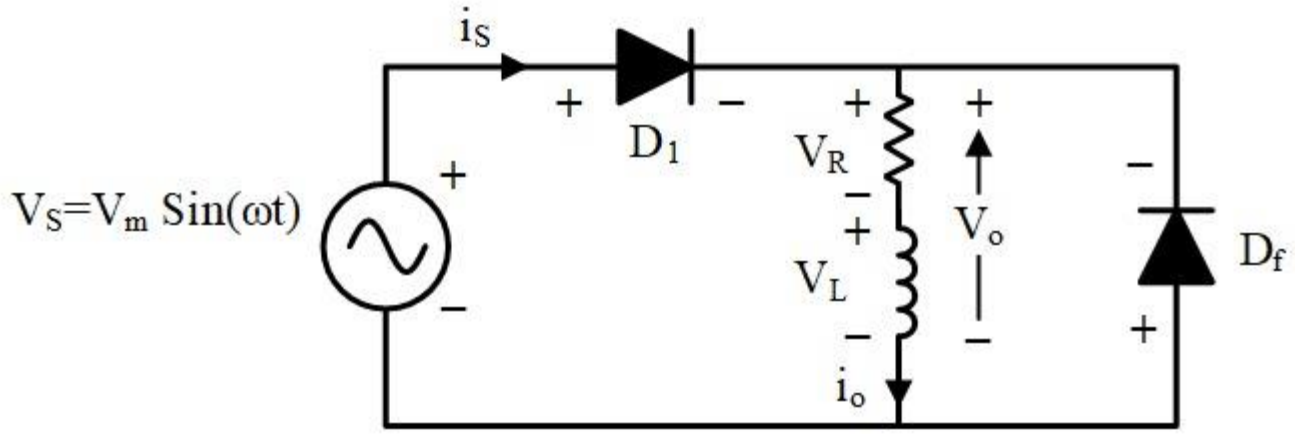

Uncontrolled Rectifier with R-L Load and Freewheeling Diode (Commutating diode)

Solution:

(a) $V_{mean} = \frac{V_m}{\pi} = \frac{\sqrt{2}\times 240}{\pi}$

$$I_{mean} = \frac{V_{mean}}{R} = \frac{\sqrt{2} \times 240}{\pi \times 10} = 10.8\ A$$

(b)

$$Z = \sqrt{R^2 + (\omega L)^2} = \sqrt{10^2 + (2\pi \times 50 \times 50 \times 10^{-3})^2} = 18.62\Omega$$

$$\tan\theta = \frac{\omega L}{R} = \frac{2\pi \times 50 \times 50 \times 10^{-3}}{10} = 1.57, and\ \theta = 57.51°$$

Uncontrolled Rectifier with R-L Load and Freewheeling Diode (Commutating diode)

$$I_{o2\pi} = \frac{V_m}{Z} \sin\theta \frac{\left[1 + e^{(-\pi/\tan\theta)}\right]}{e^{(\pi/\tan\theta)} - e^{(-\pi/\tan\theta)}}$$

$$I_{o2\pi} = \frac{\sqrt{2} \times 240}{18.62} \sin(57.51°) \frac{\left[1 + e^{\left(-\frac{\pi}{1.57}\right)}\right]}{e^{\left(\frac{\pi}{1.57}\right)} - e^{\left(-\frac{\pi}{1.57}\right)}} = 15.375 \times \frac{1.13519}{7.26135}$$

$$I_{o2\pi} = 2.4\ A$$

$$I_{o1\pi} = I_{o2\pi}\ e^{(\pi/\tan\theta)} = 17.73\ A$$

Uncontrolled Rectifier with R-L Load and Freewheeling Diode (Commutating diode)

Advantages of the Freewheeling Diode:

- Reduces voltage spikes across the load and rectifier.
- Maintains continuous current through the inductive load.
- Reduces current ripple and improves average DC output voltage.
- Protects diodes and the load from overvoltage.


Thanks for listening!